ACRALIGHT™

INTERNATIONAL SKYLIGHTS

800-325-4355

FRAME FINISH	MANUAL RELEASE OPTIONS
❍ MILL (UNFINISHED)	❍ INTERIOR RELEASE
❍ OTHER:_____	❍ EXTERIOR RELEASE
	❍ NO MANUAL RELEASE

FUSIBLE LINK OPTIONS

- ❍ 165° UL/FM FUSIBLE LINK
- ❍ 212° UL/FM FUSIBLE LINK
- ❍ 286° UL/FM FUSIBLE LINK
- ❍ 370° UL/FM FUSIBLE LINK

SKY-ARC™

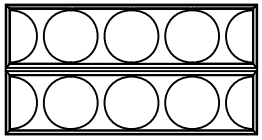

PLAN VIEW

SIDE ELEVATION

END ELEVATION

DOUBLE DOME GLAZING

OUTER GLAZING

❍ SKY TOUGH™ (ST) WHITE

INNER GLAZING

❍ CLEAR COLORLESS

QTY.	MODEL	ROUGH OPENING	QTY.	MODEL	ROUGH OPENING
SQUARE			RECTANGULAR		
	4848	48" X 48"			
RECTANGULAR					
	4896	48" X 96"			

ICC ES RECOGNIZED 10 PSF

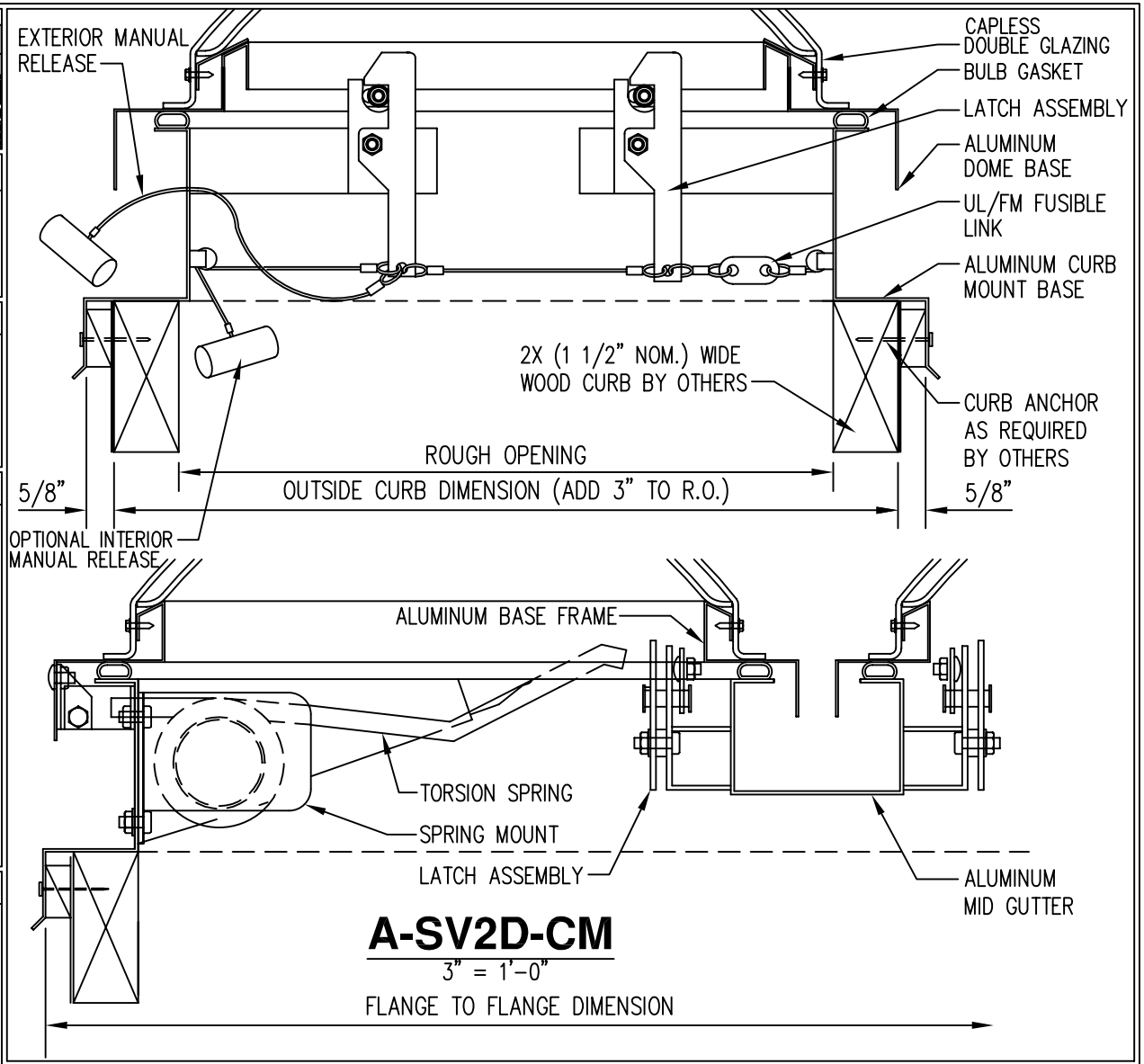

A-SV2D-CM

3" = 1'-0"

PROJECT :			**REVISIONS**
CUSTOMER :			△ _____
APPROVED BY:		**DATE:**	△ _____
JOB NO. :	**DWG. BY : O.S.**	**DATE NEEDED OR SHIP BY:**	△ _____
DATE SUB.:	**ALUMINUM DUAL LID SMOKE VENT CURB MOUNTED DOUBLE DOME**		**PAGE: 2.14**