ACRALIGHT™

INTERNATIONAL SKYLIGHTS

800-325-4355

FRAME FINISH

- ❍ BRONZE ANODIZE
- ❍ CLEAR ANODIZE
- ❍ MILL (UNFINISHED)
- ❍ PAINT (BRONZE, WHITE, OR CUSTOM COLOR: _____)

DOUBLE DOME GLAZING

OUTER DOME	INNER DOME
❍ CLEAR COLORLESS	❍ CLEAR COLORLESS
❍ HIGH WHITE	❍ HIGH WHITE
❍ MEDIUM WHITE	❍ MEDIUM WHITE
❍ BRONZE	❍ BRONZE
❍ OTHER: _____	❍ OTHER: _____

QTY.	MODEL	ROUGH OPENING	
CIRCULAR			
	24	24"ø	
	31	31"ø	
	43	43"ø	
	54	54"ø	
	67	67"ø	
	79	79"ø	
	91	91"ø	

CUSTOM SIZE ROUGH OPENING

QTY.	

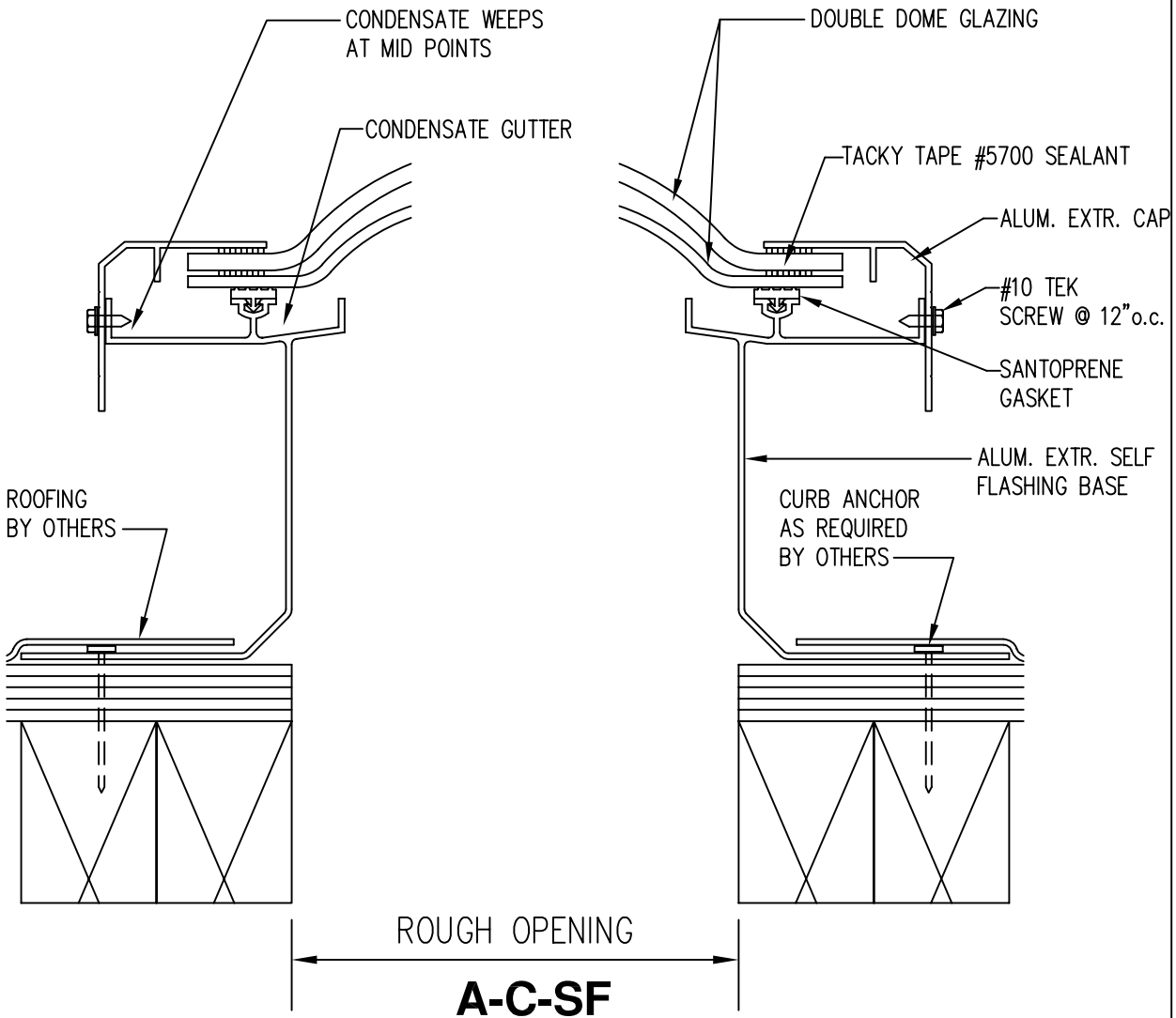

A-C-SF

SCALE: 6" = 1'-0"

PROJECT :		**REVISIONS**
CUSTOMER :		△ _____
APPROVED BY:	**DATE:**	△ _____
JOB NO. :	**DWG. BY: O.S.**	△ _____
DATE NEEDED OR SHIP BY:		
DATE SUB.:	**ALUMINUM CIRCULAR SELF FLASHING DOUBLE DOME SKYLIGHT**	**PAGE: 1.20**